Dept / Qty	
DC	1
ED	1
IE	1
ISO	1
PD	1
R&D	1
SD	1
QA	1
QC	1
QE	1

The information provided herein is from CONNFLY Electronic Co., Ltd. and is confidential. Any disclosure to a party other than the recipient is prohibited. The intellectual properties and its rights contained herein, including but not limited to, trademarks, patents, copyrights, trade secrets, and technical know-how, are owned exclusively by CONNFLY or its affiliates. Unauthorized use or modification is strictly prohibited without prior written consent from CONNFLY. All intellectual properties provided herein are for reference purposes only and does not constitute authorization of its use in any format or manner. CONNFLY may enforce its intellectual property rights at its own discretion; failures or delays to exercise such rights does not constitute a waiver of such rights.

[Female]

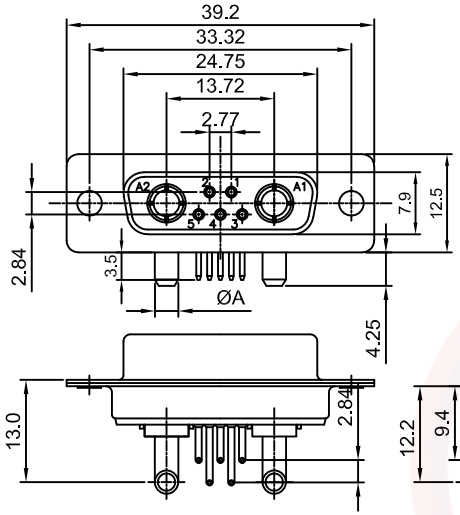

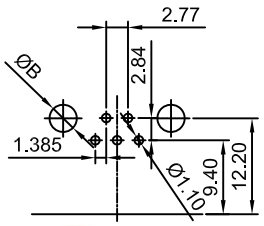

Recommend PCB layout

[Male]

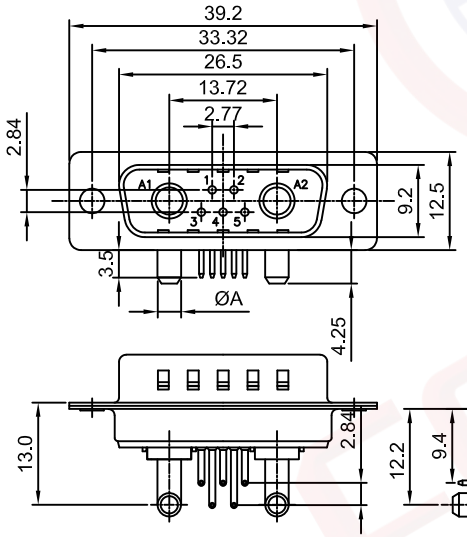

Type	Current rating	ØA	ØB
1	10A	Ø1.8	Ø2.0
2	20A	Ø2.8	Ø3.0
3	30A	Ø3.3	Ø3.5
4	40A	Ø3.8	Ø4.0

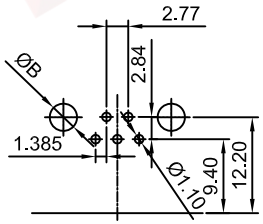

Recommend PCB layout

(Series Image-Reference Only)

REV.	DESCRIPTION	DRAWN	CHECKED	APPROVED
A	NEW RELEASE	LJC 01/17/09'		
B	DRAWING UPDATE	JLZ 09/02/20'		
C	DRAWING UPDATE	JLZ 04/08/25'		

Notes:

1. Electrical characteristics:
   1.1 Contact resistance: 20mΩ Max. Initial.
   1.2 Dielectric withstanding voltage: 500V AC(rms)for 1 minute.
   1.3 Insulation resistance: 1000MΩ Min.
   1.4 Current rating: 5A/10-40A(Power pin)
   1.5 Voltage rating: 300V
2. Environment characteristics:
   2.1 Temperature range: -40° C ~ +105° C.
3. Mechanical characteristics:
   3.1 Durablility: 500 cycles.
   3.2 Contact retention force: 1Kgf Minimum.
4. Materials:
   3.1. Shell: SPCC.
   3.2. Contact: Copper alloy.
   3.3. Insulator: Thermoplastic UL 94V-0,Glass fiber filled.
5. Part number code:

DS1034-04- X X X X X

- Current rating
  1: 10A
  2: 20A
  3: 30A
  4: 40A
- Contact plating
  8: Full gold flash
  C: Full 3u" gold
- Shell plating
  N: Fornt shell nickel,Back shell tin
- Housing color
  B: Black
  W: White
  L: Blue
- Connector type
  M: Male
  F: Female

GENERAL TOLERANCE		ANGLE TOLERANCE	
X.	±0.60	X.	±5°
.X	±0.38	.X	±3°
.XX	±0.25	.XX	±2°

DRAWING TYPE	CUSTOMER		
SCALE	1:1	SHEET	1 OF 1
DRAWING NO.	C-DS1034-04-XXXXX-C		

PROJECTION		TITLE	MACHINE PIN D-SUB 5+2 R/A TYPE
UNITS	mm		
SHEET SIZE	A4	SERIES	DS1034-04 SERIES

晨翔电子有限公司
CONNFLY CONNFLY ELECTRONIC CO. LTD